Heckler & Koch P7 Pistol

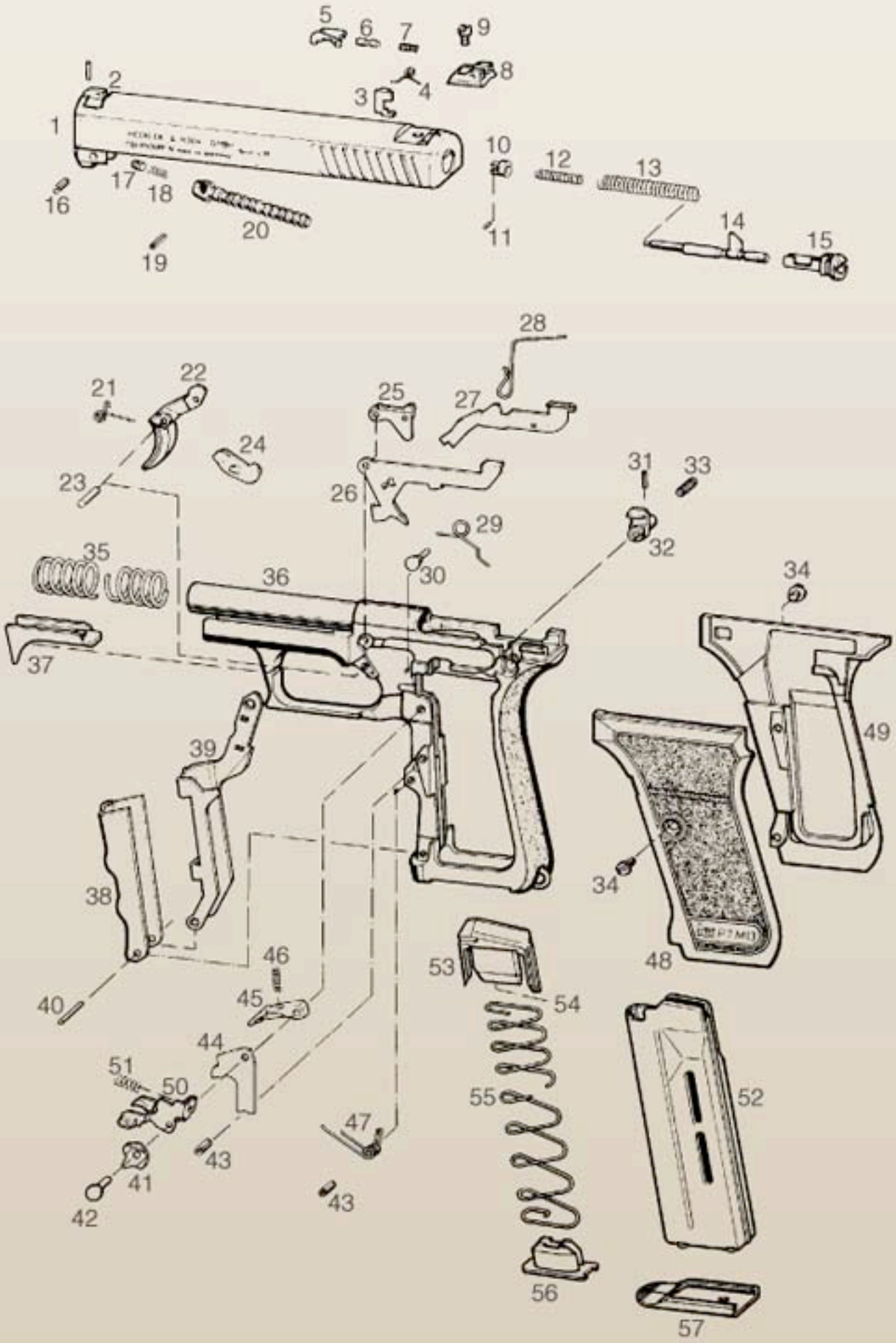

Parts Legend

1. Slide
2. Front sight
3. Drop safety catch
4. Drop safety catch spring
5. Extractor
6. Extractor spring guide
7. Extractor spring
8. Rear sight
9. Rear sight screw
10. Firing pin collar
11. Firing pin collar pin
12. Inertia spring
13. Firing pin spring
14. Firing pin
15. Firing pin bushing
16. Piston pin
17. Piston detent
18. Piston detent spring
19. Piston retaining pin
20. Piston
21. Trigger spring
22. Trigger
23. Trigger pin
24. Transmission lever
25. Disconnector
26. Slide catch lever
27. Sear bar
28. Sear spring
29. Rocker spring
30. Rocker spring axle
31. Front sight/slide retainer pin (2)
32. Slide retainer
33. Slide retainer spring
34. Grip screw (2)
35. Recoil spring
36. Receiver with barrel
37. Cover for trigger guard
38. Squeeze cocker
39. Drag lever
40. Squeeze cocker axle
41. Rocker
42. Magazine catch axle
43. Stop pin (2)
44. Stop
45. Cocking latch
46. Cocking latch spring
47. Squeeze cocker spring
48. Grip, left
49. Grip, right
50. Magazine catch
51. Magazine catch spring
52. Magazine housing
53. Follower
54. Follower insert
55. Follower spring
56. Locking plate
57. Magazine floorplate

Drawing courtesy of Heckler & Koch